IF IN DOUBT ASK ENGINEERING | DO NOT SCALE THE DRAWING | ALL DIMENSIONS ARE IN mm UNLESS OTHERWISE STATED | REMOVE ALL BURRS AND SHARP EDGES

NOTE:
1. 40mm THICK & 40Kg/m3 FOAM WITH 10mm THICK NITRIAL DENSITY 65Kg/m3 GLUED TO ALL INSIDE FACES OF WALLS, DOORS, COLUMNS, RADIATOR/ALTERNATOR DUCTS, TOP/BOTTOM BEAMS, ROOF AND BAFFLE PLATES IN ALTERNATOR SIDE EXCEPT PUNCH AREA.
2. USE ONLY Zn WITH BLUE PASSIVATED FASTNERS.
3. CANOPY PARTS TO BE POWDER COATED IN PE BLUE EXCEPT ROOF AND PUNCH MESH WHICH ARE IN RAL 5000 STRUCTURE FINISH.
4. SHEET THICKNESS FOR ALL CANOPY PARTS ARE IN 1.2mm THK.CRCA SHEET.
5. SHEET MATL. FOR PRESSED CHANNELS IN MAIN FRAME CRCA 4 & 5mm HR THICK.
6. ALL JOINTS BETWEEN ROOF, COLUMNS AND TOP BEAMS ARE TO BE PASTED WITH 40 mm WIDTH BY 3mm THICK NOISE INSULATING TAPE TO AVOID NOISE LEAKAGES.
7. TOLERANCE ON OVERALL DIMENSIONS IS ±20mm.
8. ALL DOORS RUBBER BIDDING BULB DIA. 12mm.
9. ALL EXTERNAL FASTNERS, CANOPY LOCKS & HINGES ARE IN STAINLESS STEEL.

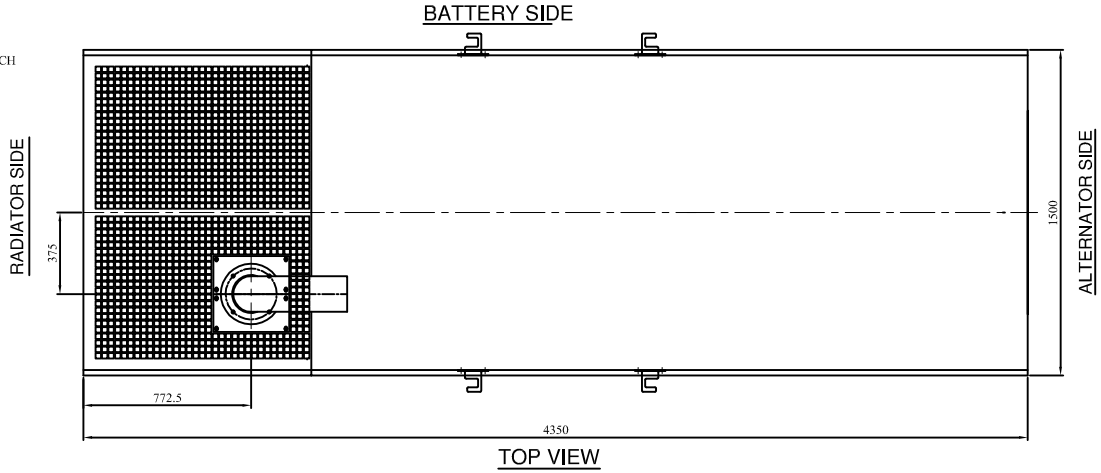

TOP VIEW

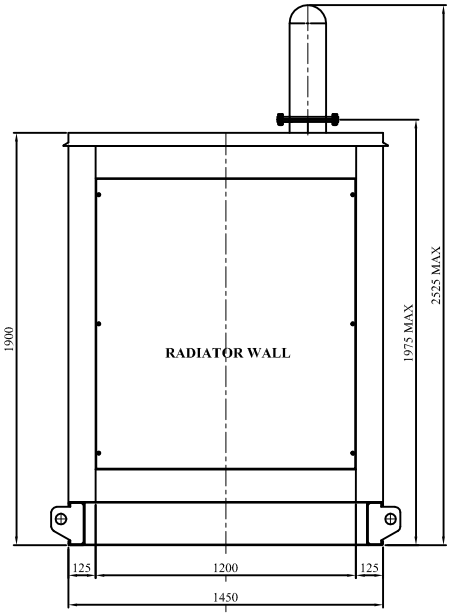

LH SIDE VIEW

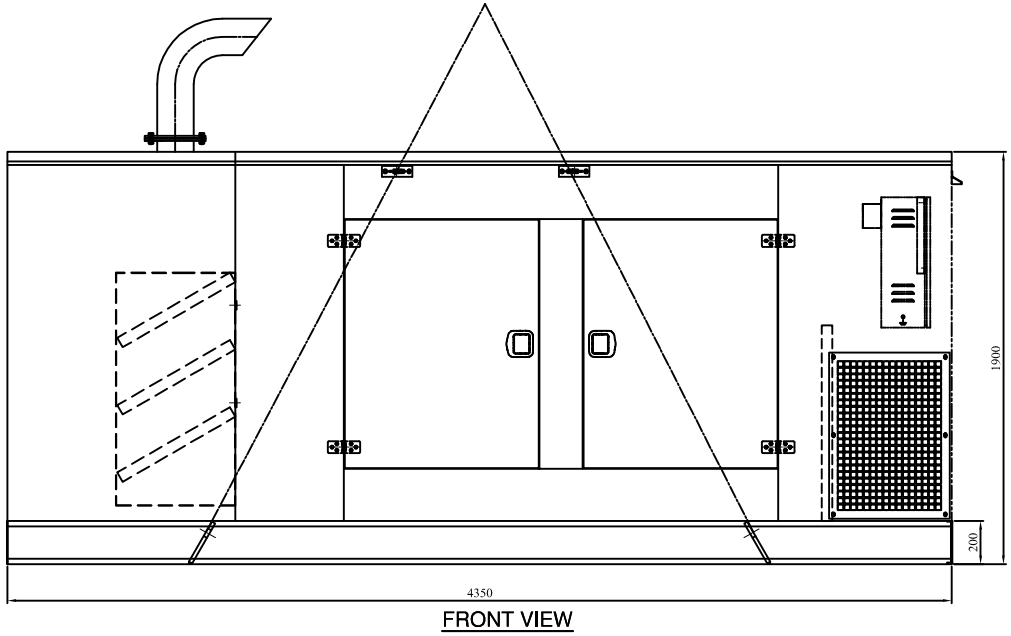

FRONT VIEW

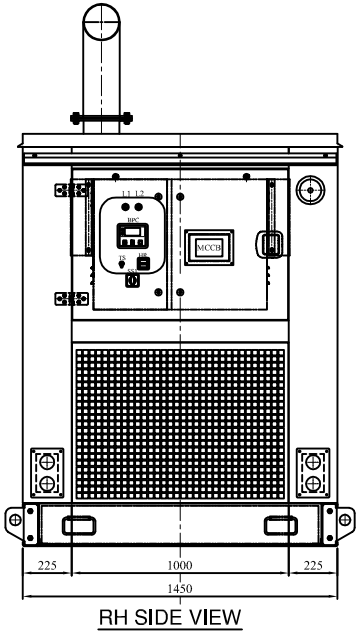

RH SIDE VIEW

REV.	ZONE	DCN No.	BRIEF RECORD	SIGNATURE	DATE

UNMENTIONED TOLERANCES

LINEAR DIMENSIONS (MACHINED)	ABOVE	0	6	315	1000
	UP TO	6	315	1000	2000
	TOL.	±0.2	±0.5	±0.8	±1.2
ANGLES			±1/2°		

SURFACE ROUGHNESS (MAX.) AS PER KSD-02-027

Ra m	50	12.5	25	1.6	3.2	6.3	0.2	0.4	0.6	0.8	0.025	0.05	0.1
OLD	∽	▽		▽▽			▽▽▽			▽▽▽▽			
NEW													

UNMENTIONED

RAD. | UC. | CHAM.

ALL INFORMATION CONTAINED IN THIS DOCUMENT IS CONFIDENTIAL AND THE PROPERTY OF KIRLOSKAR ELECTRIC CO. LTD. REPRODUCTION OF THESE IN ANY FORM IS TO BE DONE WITH THE SPECIFIC PERMISSION OF THE COMPANY.

PRINTS ISSUED TO

THIS SUPERSEDES . . . . . FROM . . . . . AS PER DCN NO. . . . . .
THIS IS SUPERSEDED BY. . . . . FROM . . . . . AS PER DCN NO . . . . . .

MATERIAL SPECIFICATION	RAW MATERIAL SIZE	WEIGHT kg. RM.	FIN.

CASTING/FAB REF. | No.P.S. | SCALE 1:1

USED ON: KEC-C200-II kVA DG SET.

DRAWN	CHECKED	STANDARD	APPROVED
S.D.N	P.M.D.		
dt. 20.7.15	dt.	dt.	dt.

TITLE: G.A.DRAWING OF ACOUSTIC DG SET 200kVA-M5

12504815R00/000

SHEET No. . . . . OF . . . . . .

KIRLOSKAR ELECTRIC COMPANY LTD. HUBLI – 580 030 – (INDIA)

FORM No. 02 201 026 (ISSUE 7)