IF IN DOUBT ASK ENGINEERING | DO NOT SCALE THE DRAWING | ALL DIMENSIONS ARE IN mm UNLESS OTHERWISE STATED | REMOVE ALL BURRS AND SHARP EDGES

NOTE:
1. 25 mm THICK & 26Kg/m3 DENSITY FOAM GLUED TO ALL INSIDE FACES OF WALLS, DOORS, COLUMNS, RADIATOR/ALTERNATOR DUCTS, TOP/BOTTOM BEAMS, ROOF AND BAFFLE PLATES IN ALTERNATOR SIDE EXCEPT PUNCH AREA.
2. USE ONLY Zn WITH BLUE PASSIVATED FASTNERS.
3. CANOPY PARTS SHALL BE POWDER COATED IN PE BLUE STRUCTURE FINISH EXCEPT ROOF, BASE FRAME AND PUNCH MESH WHICH ARE IN RAL 5000 STRUCTURE FINISH.
4. SHEET THICKNESS FOR ALL CANOPY PARTS ARE IN 1.2mm THK.CRCA SHEET.
5. SHEET MATL. FOR PRESSED CHANNELS IN MAIN FRAME CRCA 3mm & HR 4mm THICK.
6. ALL JOINTS BETWEEN ROOF, COLUMNS AND TOP BEAMS ARE SHALL BE PASTED WITH 25 mm WIDTH BY 3mm THICK NOISE INSULATING TAPE TO AVOID NOISE LEAKAGES.
7. TOLERANCE ON OVERALL DIMENSIONS IS ±20mm.
8. ALL DOORS RUBBER BEADING BULB DIA. 12mm.
9. ALL EXTERNAL FASTNERS, CANOPY LOCKS & HINGES ARE IN STAINLESS STEEL.

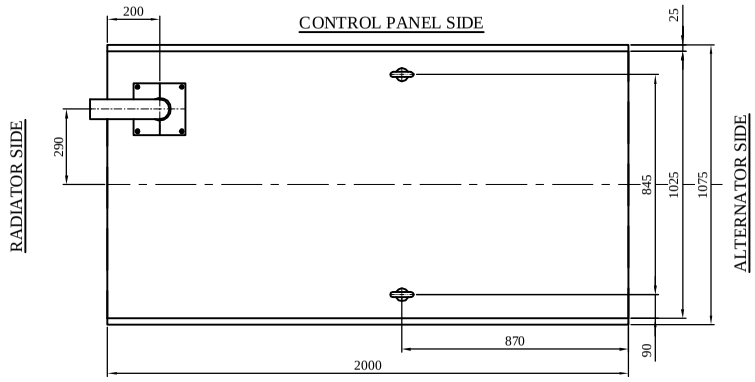

TOP VIEW

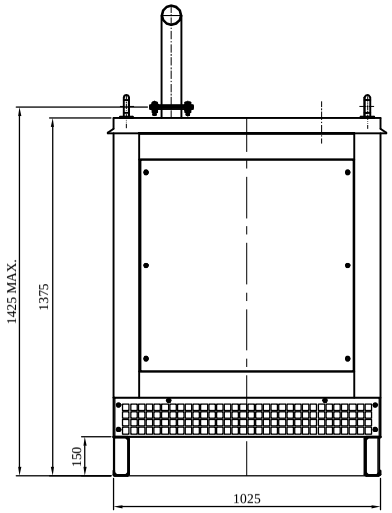

LH SIDE VIEW

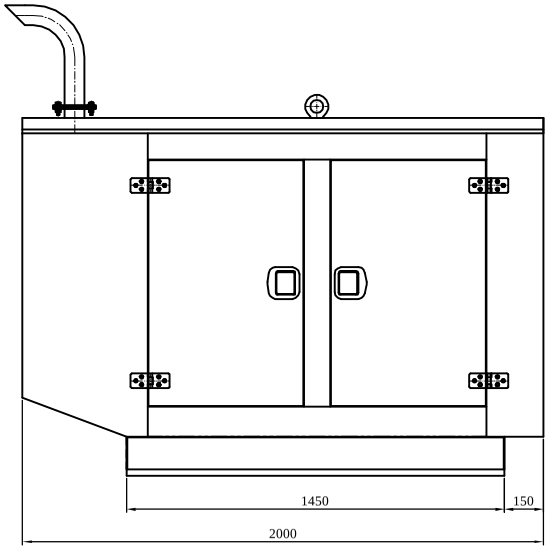

FRONT VIEW

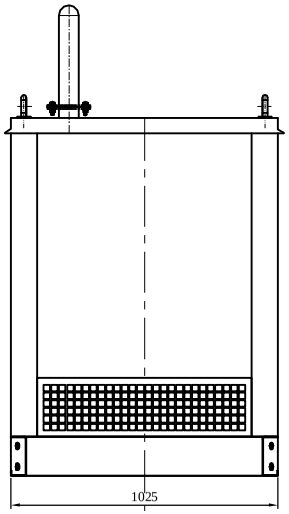

RH SIDE VIEW

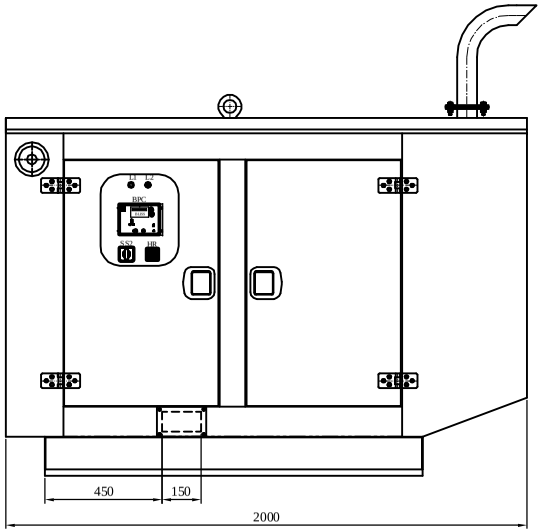

REAR VIEW

REV.	ZONE	DCN No.	BRIEF RECORD	SIGNATURE	DATE

UNMENTIONED TOLERANCES

LINEAR DIMENSIONS (MACHINED)	ABOVE	0	6	315	1000
	UP TO	6	315	1000	2000
	TOL.	±0.2	±0.5	±0.8	±1.2
ANGLES	±1/2°				

SURFACE ROUGHNESS (MAX.) AS PER KSD-02-027

Ra	m	50	12.5	25	1.6	3.2	6.3	0.2	0.4	0.8	0.025	0.05	0.1
OLD	∞	▽			▽▽			▽▽▽			▽▽▽▽		
NEW	Ra												

UNMENTIONED

RAD. UC. CHAM.

ALL INFORMATION CONTAINED IN THIS DOCUMENT IS CONFIDENTIAL AND THE PROPERTY OF KIRLOSKAR ELECTRIC CO. LTD. REPRODUCTION OF THESE IN ANY FORM IS TO BE DONE WITH THE SPECIFIC PERMISSION OF THE COMPANY.

PRINTS ISSUED TO

THIS SUPERSEDES ..... FROM ..... AS PER DCN NO. .....
THIS IS SUPERSEDED BY ..... FROM ..... AS PER DCN NO. .....

MATERIAL SPECIFICATION	RAW MATERIAL SIZE	WEIGHT kg. RM.	FIN.

SCALE: 1:1

CASTING/FAB REF. | No.P.S.

USED ON: KEC-E15-II kVA D.G. SET

DRAWN	CHECKED	STANDARD	APPROVED
S.D.N dt. 17.7.14	P.M.D. dt.	dt.	dt.

TITLE: G.A. DRAWING OF ACOUSTIC DG SET-15kVA-M5

12503014R000/00

SHEET No. ..... OF .....

KIRLOSKAR ELECTRIC COMPANY LTD. HUBLI – 580 030 – (INDIA)

FORM No. 02 201 026 (ISSUE 7)