4	3	2	1

DO NOT SCALE THE DRAWING — ALL DIMENSIONS ARE IN mm UNLESS OTHERWISE STATED

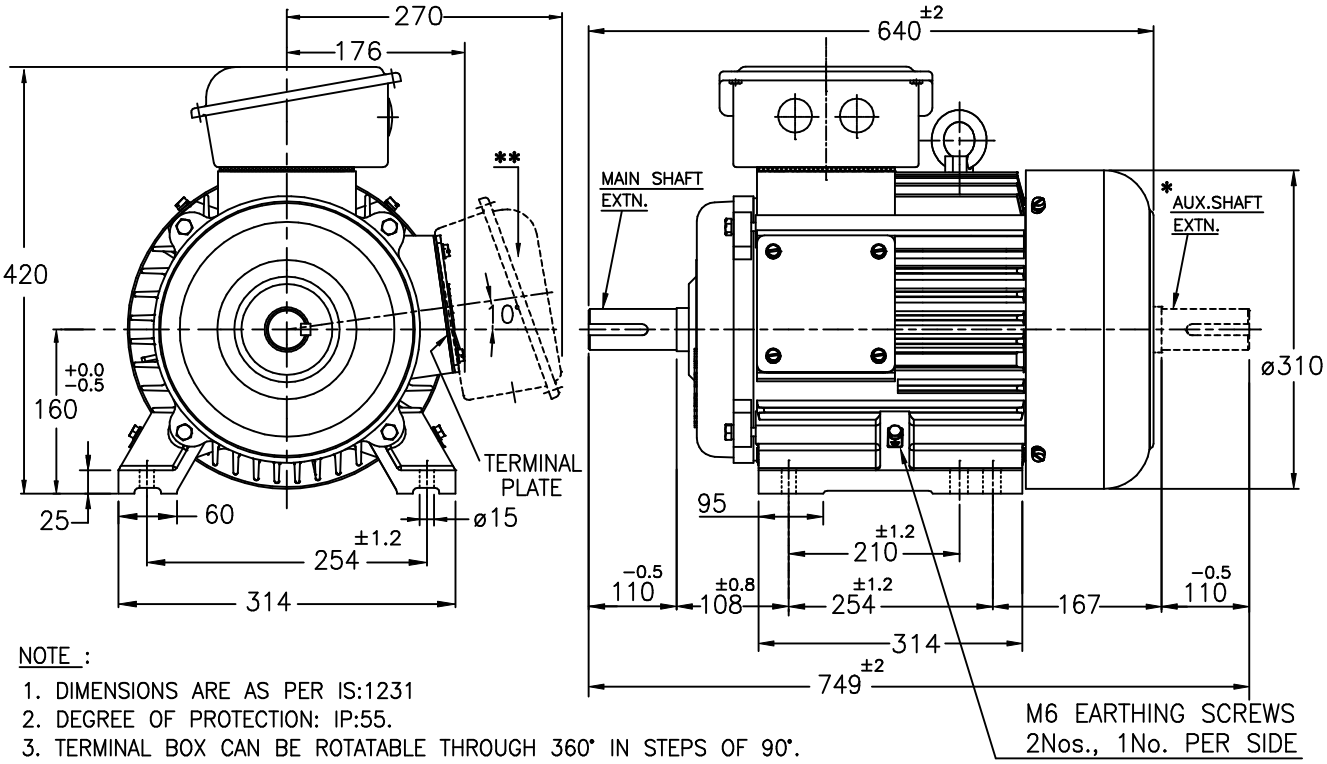

NOTE :

1. DIMENSIONS ARE AS PER IS:1231
2. DEGREE OF PROTECTION: IP:55.
3. TERMINAL BOX CAN BE ROTATABLE THROUGH 360° IN STEPS OF 90°.
4. KEY & KEYWAY ARE AS PER IS:2048 & TOLERENCE ON KEYWAY IS P9.
5. PROTECTED CENTRE HOLE AT SHAFT EXTENSION AS PER IS:2540.–M16X32
6. * OPTIONAL IN CASE OF DOUBLE SHAFT EXTENSION
7. ** OPTIONAL IN CASE OF RHS
8. UNLESS OTHERWISE SPECFIED TERMINAL BOX LOCATION WILL BE ON TOP SIDE WITH SINGLE SHAFT EXTENSION

TERMINAL BOX ARRANGEMENT

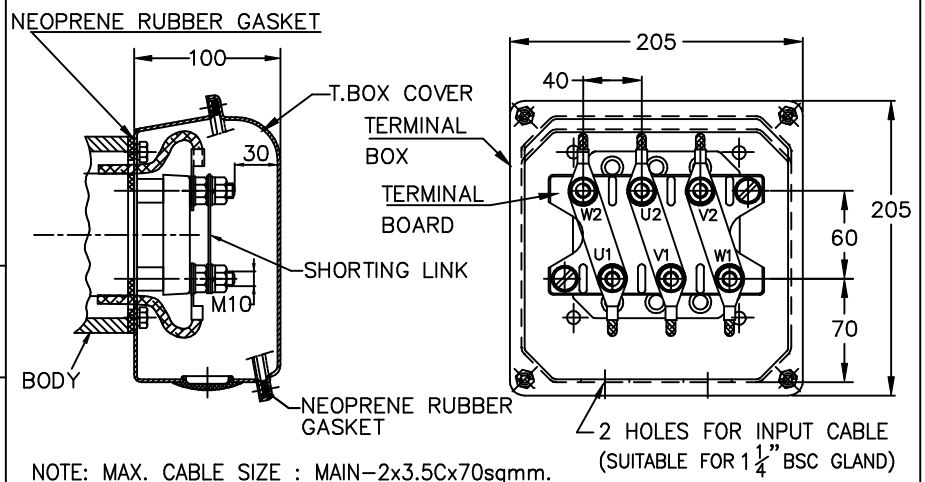

NOTE: MAX. CABLE SIZE : MAIN–2x3.5Cx70sqmm.
SHORTING LINKS ARE PROVIDED ONLY FOR DOL START.
AND NOT FOR STAR–DELTA STARTING.

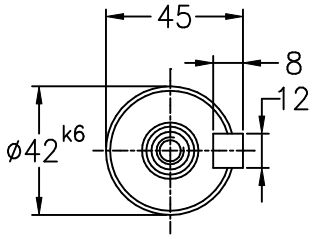

DETAILS OF SHAFT EXTENSION
MAIN & AXULLARY

ITEM/TAG No.					
RATING		PROJECT :			
CABLE SIZE		CONSULTANT		JOB No.	

REV.	ZONE	BRIEF RECORD	SIGNATURE	DATE	PRINTS ISSUED TO.

CUSTOMER / O/A No.	SCALE NTS	DRAWN	SPC 13.6.2016
		CHECKED	Vishnu.S.H 13.6.2016
USED ON / TYPE RC160ML (SHEET METAL T.BOX WITHOUT GLAND, DOUBLE ENTRY)		APPROVED	RNV 13.6.2016
TITLE: DIMENSION SHEET		DRG. NO. KHD61580	
		SHEET NO. ONE OF ONE	

KIRLOSKAR ELECTRIC COMPANY LTD. HUBLI – 580 030 (INDIA)

IF IN DOUBT ASK ENGINEERING

ALL INFORMATION CONTAINED IN THIS DOCUMENT IS CONFIDENTIAL AND THE PROPERTY OF KIRLOSKAR ELECTRIC CO. LTD. REPRODUCTION OF THESE IN ANY FORM IS TO BE DONE WITH THE SPECIFIC PERMISSION OF THE COMPANY.

SIGN & DATE.	--	--
FROM dt.	--	--
DRAWING No.	--	--
THIS SUPERSEDES		
THIS IS SUPERSEDED BY		

FORM No. 02 201 050 (ISSUE 8)